Manual: AZ-Envy

Version of documentation

Date	Version	Changes
16.11.2020	**1.0**	First draft

Table of contents

1 Introduction

1.1 Copyright and Copyright

1.2 Trademarks

2 Description of the product

2.1 Intended use

2.2 Product description

2.3 Scope of delivery

2.4 Technical data

2.5 Requirements for the operating environment

2.6 Requirements for the power supply

3 How it works

3.1 ESP8266MOD 12-F

3.2 SHT30-DIS-B

3.3 MQ-2

3.4 User interface

3.5 Control panels

3.6 Explanation of the visual signals

4 Safety Instructions

4.1 General safety information

4.2 Safety instructions for handling electrostatic-sensitive components and groups

5 Getting started

5.1 Download and installation of the development environment

5.2 Configuration of the Arduino IDE

5.3 Programming process and hardware requirements

5.4 example codes

6 Error table

7 Disposal and license information

8 Guarantee and warranty

1. Preface

1.1 Copyright and Copyright

Copyright © 2020 AZ-Delivery Vertriebs GmbH

All rights reserved. No part of this publication may be reproduced, distributed or transmitted in any form or by any means, including photocopying, recording, or any other electronic or mechanical means, without the prior written consent of the publisher. For approval inquiries, please contact the publisher, labeled "For: Authorization Coordinator", at the address below.

AZ-Delivery Vertriebs GmbH, Bräugasse 9, 94469 Deggendorf

Web: www.az-delivery.de

1.2 Trademark

AZ-Delivery Vertriebs GmbH has made every effort to provide trademark information about the company names, products and services mentioned in this manual. The brands shown below come from various sources. All trademarks are the property of their respective owners. General Notes: Some product names used in this manual are used for identification purposes only and may be trademarks of their respective companies.

2. Description of the product

2.1 Intended use

The AZ-Envy was developed as a test module or prototyping platform for learning how to program microcontrollers. Any further use beyond this is not in accordance with the intended use. Never use the module for safety-relevant applications.

2.2 Product description

The AZ-Envy is a so-called "physical computing platform", similar to the modules of the well-known Arduino or ESP families. The board essentially consists of four components, a microcontroller with a highly integrated TCP / IP stack (ESP8266) and controllable LEDs, a gas sensor (MQ-2), a temperature and humidity sensor (SHT30), and a linear voltage converter. There is also a micro-USB socket on the module for power supply, as well as an interface for programming, using an FTDI adapter on an integrated pin header. In addition, two push buttons are integrated on the circuit board, which are used to reset and start the flash mode.

2.3 Scope of delivery

- 1x AZ-Envy Development-Board

2.4 Technical Data

Technical Data - general	
Name of the device	AZ-Envy
CPU	ESP8266MOD 12F
Logic level	3,3V
Power Supply	Via USB-connector: 5,1V
Max. load of GPIO-Pins	each 10mA, max. 50mA total
Power consumption	Depending on mode of operation, max. 500mA (peak)
Frequency of WLAN-Chips	ISM-Band at 2,4Ghz: 2,412–2,472 GHz
Max. transmission power	Up to 11 dBm (0,012W) (802.11b) @ 11Mbps Up to 11 dBm (0,012W) (802.11g) @ 54Mbps Up to 11 dBm (0,012W) (802.11n) @ 72Mbps
Supported WLAN-Spezifications	IEEE 802.11b, 802.11g and 802.11n
Interfaces	UART / GPIO / ADC / PWM / SPI / I2C
Max. Baud-Rate UART	Up to 4608000 bps
USB-Connector	Micro-USB
Environmental requirements	Indoor only
Dimensions	L=50mm, B=50mm, H=17,3mm (variable)
Weight	12,5g

Technical Data – SHT30-DIS-B	
Name of the device	SHT30-DIS-B
Package	8-Pin DFN
Sensor interface	I2C
Power supply	2,15V-5,5V
Operating temperature	-40°C – 125°C
Signal	Digital
Relative Humidity	0-100% @+/- 3%
Temperature	-40-125°C @+/-0,3°C

Technical Data – MQ-2	
Name of the device	MQ-2
Working method	Metalloxid Halbleiter (MOS)
Sensor interface	Analog / Relative values
Power Supply	5V
Operating temperature	-20°C-50°C
Standard Environment	Temp: 20°C, rel. Hum.: 65%
Detection	LPG, Butanole, Propane, Methane, Alcohol, Smoke

2.5 Operating environment requirements

Operate the product only in a clean, dry and dust-free environment. Do not expose the product to water or moisture. Note that the processor and the gas sensor develop heat during operation and ensure that there is sufficient ventilation to dissipate it. Protect the module from conductive surfaces during operation to avoid short circuits. Make sure that you place potentially voltage-conducting objects away from the circuit board to ensure proper operation of the device.

2.6 Power supply requirements

A stabilized direct current source with appropriate protective devices is required to supply the module via the micro-USB port. Each voltage source must comply with the relevant country-specific standards and regulations. Only use a secured, stable DC voltage source with 5V and at least 500mA nominal power. To supply the module via the USB interface: Only use a power supply unit that complies with the USB specifications.

3. Functionality

3.1 ESP8266MOD 12-F

The ESP processor integrates the Tensilica L106 ultra-low-power 32-bit microprocessor architecture in a small housing and clocks at 80 MHz and 160 MHz. This supports RTOS and integrates Wi-Fi MAC / BB / RF / PA / LNA functions. The ESP8266MOD WiFi module supports the IEEE802.11 b / g / n standard and implements the complete TCP / IP protocol stack. With this module, users can add network functions to existing devices or create separate controllers. The ESP8266EX is a powerful wireless SOC (SystemOnChip) that offers maximum benefit at the lowest possible cost and almost unlimited possibilities for integrating WiFi functions into other systems. The ESP8266MOD is a complete and self-contained WiFi network solution that enables both host and client operation. The ESP8266MOD is able to boot directly from the SPIFFS integrated in the module (external flash memory with SPI connection). The built-in cache helps to improve system performance and reduce memory requirements. The ESP takes on the functionality of a WiFi adapter and can be added to any microcontroller-based design. Communication is uncomplicated via the SPI / SDIO, I2C or UART interfaces.

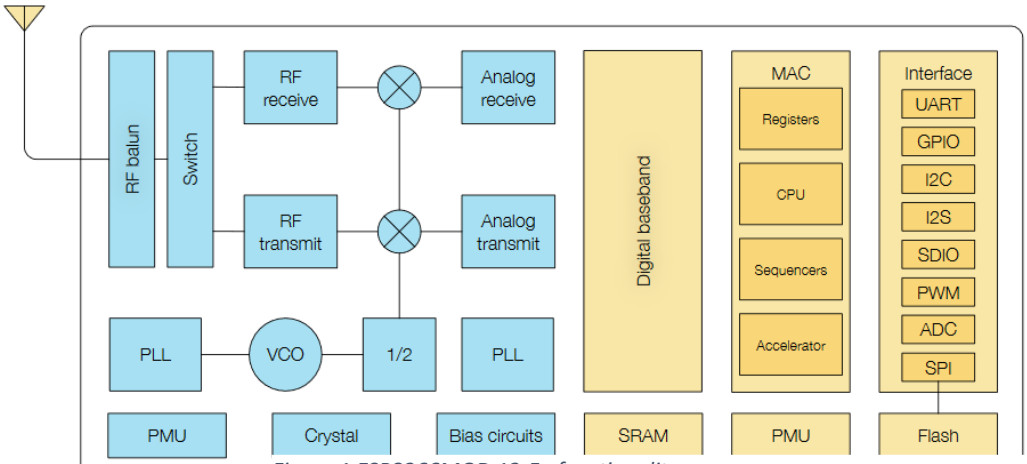

Figure 1 ESP8266MOD 12-F - functionality

3.2 SHT30-DIS-B

The SHT30-DIS-B has the ability to measure the relative humidity with an accuracy of ± 3% and the temperature with an accuracy of ± 0.3 ° C. The values are output via I2C, making the sensor ideal and easy to use in the world of microcontrollers. Due to its short "wake-up time", it is also well suited for intervals and for low-power systems. With the SMD size in the 8-pin DFN format, it is also very small and can be used well in low-voltage systems of 2.4-5.5V. The chip is based on Sensirion's CMOSens technology and can achieve communication speeds of up to 1Mhz with reduced signal noise. The library **SHT3x** is recommended for the AZ-Envy.

3.3 MQ-2

The MQ-2 gas sensor is a metal oxide semiconductor (MOS), also known as a chemical resistor. MOS sensors measure the change in resistance when gases are present. This type of sensor requires the gas to hit the sensor for a chemical reaction to take place, resulting in a change in resistance. The MQ-2 is therefore not gas-specific and the mechanism for detecting the gas is located under the explosion protection hood made of a dense stainless steel mesh. This also serves to protect against dirt particles or other disruptive factors.

The concentration (ppm) of gases is calculated based on the resistance ratio (RS / R0). RS is the measured change in resistance when the detection mechanism detects gas and R0 is the stable sensor resistance in fresh air or without gas. The MQ-2 library from **labay11** can help here, with simplified functions for determining a gas concentration in ppm.

3.4 Operating interface

The operating interface depends on the programming environment used. Use with the Arduino IDE or Eclipse are possible. In chapter 5.1 you will find installation instructions for the Arduino IDE.

3.5 Control panels

The AZ-Envy offers two buttons for operation. Pressing the RESET button triggers a reset of the ESP8266-MOD 12-F by pulling pin 1 'RST' to 'LOW'. Pressing the RESET and FLASH buttons puts the ESP12F into programming mode and enables writing to the internal flash memory.

3.6 Explanation of visual signals

Visual signals can be output via an LED. This is connected to pin GPIO2 of the ESP8266-MOD, or can be addressed via the identifier LED_BUILTIN.

4 Safety information

4.1 General safety information

- Stop using the module if it is damaged.
- When handling products that come into contact with electrical voltage, the valid VDE regulations must be observed.
- In schools, training facilities, hobby and self-help workshops, the operation must be monitored responsibly by trained staff.
- In commercial facilities, the accident prevention regulations of the Association of Commercial Employers' Liability Insurance Associations for electrical systems and equipment must be observed.
- Do not operate the product in an environment in which flammable gases, vapors or dusts are or may be present.
- The product must not be dropped or subjected to strong mechanical pressure, as the effects can damage it.

4.2 Safety instructions for handling electrostatic-sensitive components and groups

- In principle, microcontrollers are sensitive to electrostatic charges. When handling the module, make sure that electrostatic charges are discharged before touching the product in order to avoid damaging the module!
- Only remove the product from the antistatic packaging if you want to solder or program the product!
- Do not make any changes to the hardware!
- Do not overclock the product!
- Avoid direct sunlight, as this can damage the circuit board in the long term!
- Load the GPIOs only within the specifications stored in the data sheet!

5 Getting started

5.1 Download and Installation of development environment

Obtain the latest version of the following software packages:

- Development environment and Toolchain Arduino-compatible Boards

  https://www.arduino.cc/en/Main/Software

First we select the package and with it the scope of the installation. For the "Windows Installer" you may need admin rights on the target computer, but not for the "Windows Zip File". Two additional drivers are installed during the installation; this installation must be approved using the "Install" button.

5.2 Configuration of Arduino IDE

In order to be able to program the AZ-Envy with the Arduino IDE, it is necessary to enter a board administrator URL under "File / Preferences" in the Arduino-IDE:

http://arduino.esp8266.com/stable/package_esp8266com_index.json

Then open the administration dialog under "Tools / Board / Boards Manager". Enter "ESP8266" in the search box and click on "Install" in the search result.

Under the Tools / Board tab, you can now select the ESP8266 and its board designs and start programming!

5.3 Programming and Hardware requirements

To be able to program the board, select the Generic ESP8266 board under Tools and stick to the default settings. After selecting the port to which you have connected your FTDI adapter, you can click on upload. After compiling the code and initializing the upload process, press the RESET and FLASH buttons one after the other to set the ESP12-F to flash mode. Then press the RESET button after the upload and your self-programmed project will start!

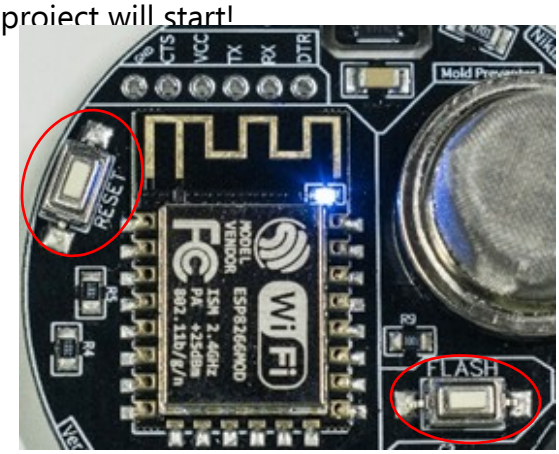

Figure 2 AZ-Envy button

5.4 Example code – Blink

```
void setup() {
pinMode(2,OUTPUT);
}
void loop() {
digitalWrite(2,LOW);
delay(1000);
digitalWrite(2,HIGH);
delay(1000);
}
```

6. Error table

Error	Possible cause	Error correction
No function (not even a short blink of the onboard LED at start-up)	Missing power supply	Check power supply
		Check USB cable
	Module defect	Contact customer service
COM-Port not available	USB adapter not connected to PC	Connect the FTDI to PC
	Driver installation	Re-install driver for CH340 or FTDI
	USB-Cable to USB adapter	Only use certified USB2.0 Cable
	USB adapter defect	Contact customer service
Programming not possible	MC not in programming mode	Press Reset, then Flash button
	Wrong COM-Port selected	Recheck COM port under Tools / Port
	Wrong Board selected	Recheck Board under Tools / Board
	Firmware defect	Restoration of the Delivery status
	USB-Cable to USB adapter	Only use certified USB2.0 Cable
	Module defect	Contact customer service
Unable to compile the Code	exit status 1 expected ';'	Recheck Program code
	exit status 1 missing termination	
	exit status 1 No such file or dir	Include library

7 Disposal and license information

Do not discard with household waste! Your microcontroller must be disposed of in an environmentally friendly manner in accordance with European Directive 2012/19 / EC on waste electrical and electronic equipment. The valuable raw materials it contains can be recycled. The application of this guideline contributes to environmental and health protection. Use the collection point set up by your municipality to return and recycle old electrical and electronic equipment.

WEEE-Reg.-Nr.: DE 62624346

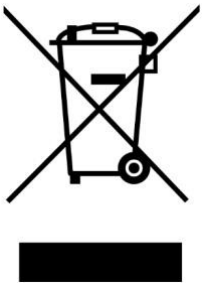

8 Guarantee and warranty

The statutory warranty regulations apply, unless otherwise agreed in our terms and conditions. You can find the terms and conditions on our website at: http://www.az-delivery.de/pages/agb. The terms and conditions apply in the version at the time the contract was concluded between the buyer and AZ-Delivery Vertriebs GmbH.